Small Craft – 50ton Modular Cutter and ATV-Module

Vol;Name;TL;Free;Gs;Fuel;Duration;MCr;Computer;Notes
50 ;Modular Cutter ;11+ ;34 ;4 ;2t;4 weeks ;27 ;Model/3bis;

Ever since I modeled my variant of the Horronon ATV the idea of doing a matching ATV-Module for the cutter was planted inside my head. So I finally started to tackle that darn thing. If you ever wanted to know why only one 10ton ATV fit into a 30ton Module: here is the answer, rendered and clear.

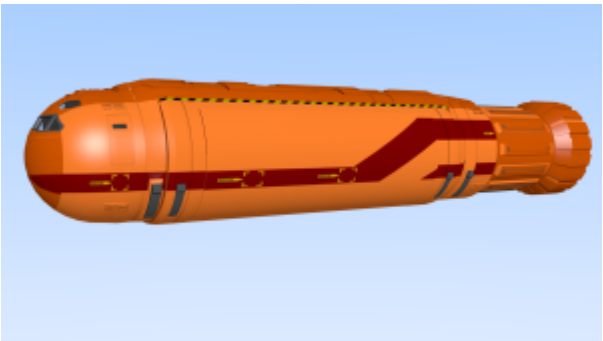

Above: A bold orange and red scheme that could belong to a deep space salvaging or SAR service.

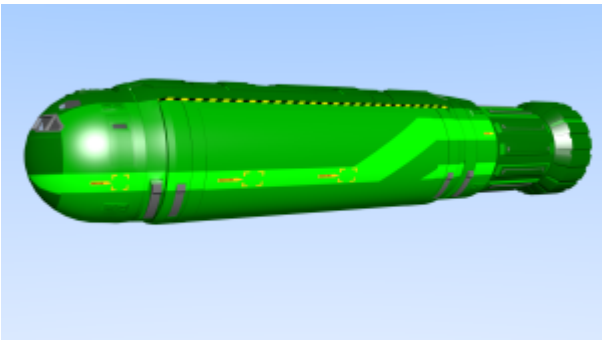

The green scheme might fit to a local hauler or passenger service providing regular scheduled in system freight or ferry service where the craft ciuld be seen on a ground port regularily.

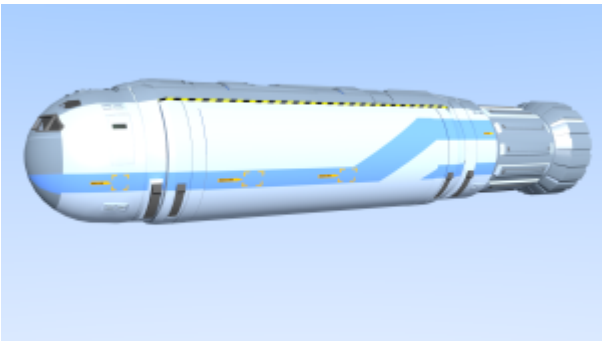

Actually this blue on ligt bluish grey reminds me of Scandinavia. The trucks from up there have these pastel colors sometimes. Translating to Traveller this could be the scheme of a freight service on the fringes of settled space.

The 50ton Modular Cutter and the 40ton Research Pinnace share a 6m diameter hull share same front section to. These cockpits have four windows out front. The 30ton Ship’s Boat and 20ton Launch also share the same hull and front section, but a 5m diameter hull. As visible at the cockpit window configuration these craft have three windows out front.

Setting out a module and ATV in 8 easy steps

I thought about a mechanism to deploy the Horronon ATV and stick as close to the vehicles description as possible. Accoding to CT Adventure 3 the ATV featured collapsible tracks. For this reason rolling onto the module was ot of the question.

So i came up with the heavy duty hoist mechanism attached to a rotating boom. The Horronon gets parked beneath the rotated boom under the module. The crew attaches the lifting hooks and lifts the Horronon, so the tracks can savely collapse. After rotating about 90 degrees, the Horronnon is lifted so that its rear gate can be opened to the cutters front compartment and that the tracks clear the path of the telescopic or clamshell gates of the module. After closing the gates the module is

ready for pickup. Depending on the vehicle the hoist mechanism can mount clamping adapters that safely secure the vehicle during transport.

Above (1): The 50ton Modular Cutter as it would aproach with a module

Above (2): Touched down with main langing gear extracted

Above (3): The modules supporting landing gear will be extracted prior to the actual setout.

The Pilot might opt to land with both the cutter’s and module’s gear extracted.

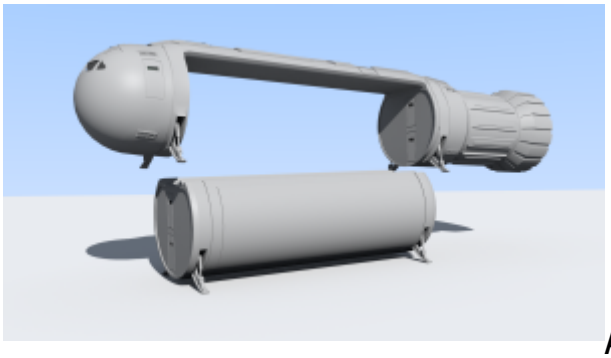

Above (4): After unclamping the module (autoreleasing support circuity inside overhead spine of the cutter), the cutter lifts straight up from the module and turns onto its new course only when clear from the module.

Above (5): The Modular Cutter leaves the module and heads of again to fetch the next or to park away in the distance…

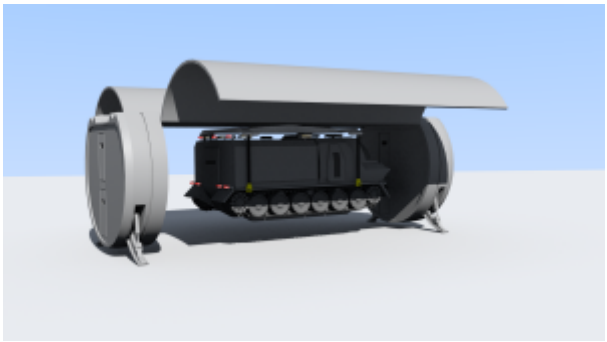

Setting out the ATV above (6): The open grounded ATV-Module

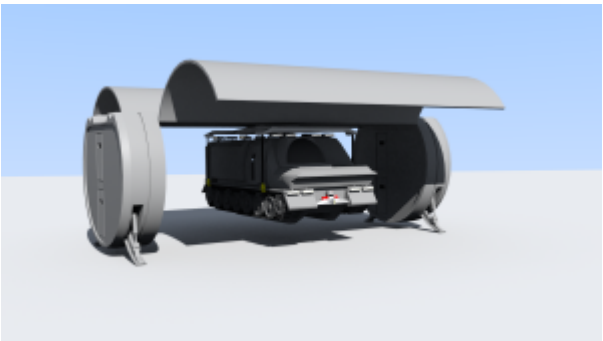

Setting out the ATV above (7): The open Module, with ATV rotated 90 degrees but tracks still collapsed

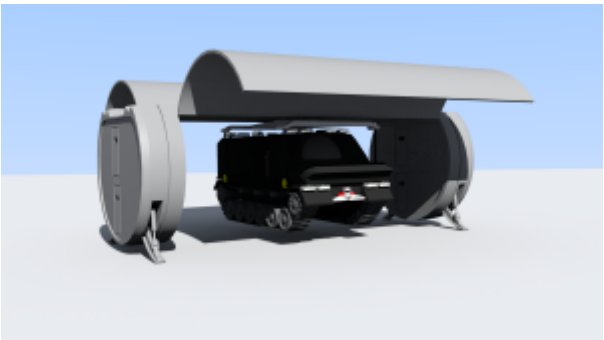

Setting out the ATV above (8): ATV hoist mechanism rotated by 90 degrees, ATV tracks deployed

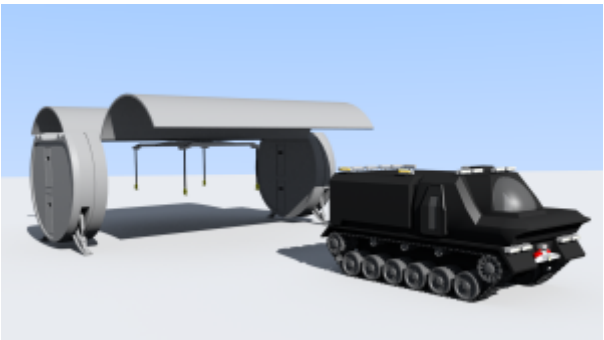

Ready for exploration or action: ATV trundling away from the empty module

This is a work in progress, so changes are very likely.

I might go ahead and design a few variants of these small

craft using these rules on CotI:

http://www.travellerrpg.com/CotI/Discuss/showthread.php?t=29680&highlight=cutter

Comments (0)

Small Craft – 50ton Modular Cutter and ATV-Module
Category: 3D-Model,Cutter,Ground Vehicle,Space Craft,Traveller,Vehicle,WIP – admin @ 02:18
Apr
15 2013